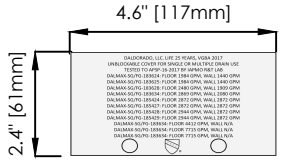


GRATE DETAIL

**CERTIFIED MAXIMUM FLOW RATE:**
**FLOOR-2,944 GPM WALL-2,872 GPM**

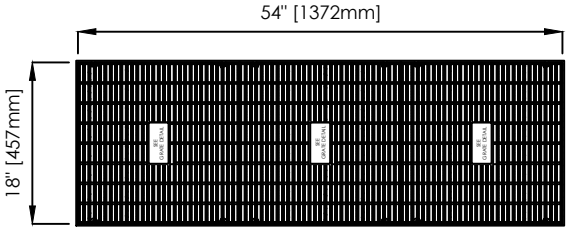


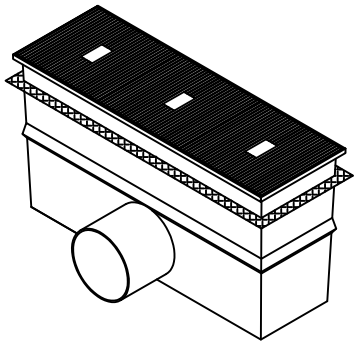

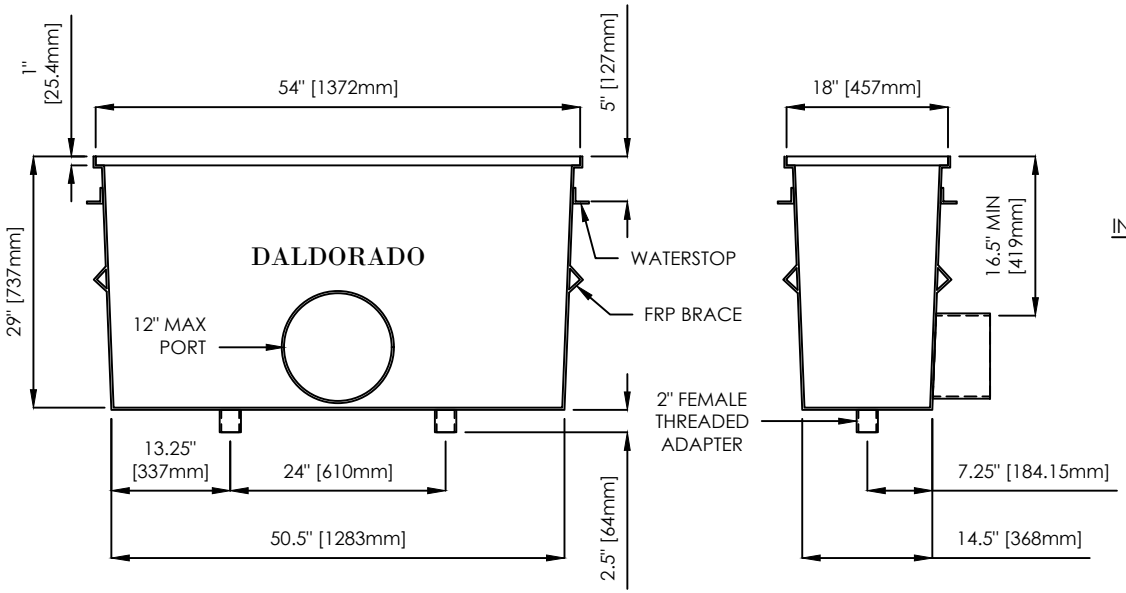


SUMP AND GRATE: UNBLOCKABLE SOFA CERTIFIED TO APSP/ANSI/ICC-16 2017, NSF/ANSI/CAN 50-2020, AND USPC. RPD FIELD CERTIFICATION IS NOT REQUIRED. CORROSION RESISTANT, NON-CONDUCTIVE, NON-MAGNETIC, AND REQUIRES NO BONDING.

SUMP: FABRICATED WITH 8-OZ FIBERGLASS MAT AND WHITE MARINE GRADE GEL COAT (APPLIED INSIDE ONLY). A 1.5-IN FRP WATER STOP IS LOCATED 5-IN BELOW TOP LIP OF SUMP AND A 1.5-IN FRP BRACE IS APPLIED, BOTH AROUND THE OUTSIDE PERIMETER. TWO (2) 2-IN SCH-40 FEMALE THREADED ADAPTERS ARE INSTALLED STANDARD ON THE BOTTOM OF THE SUMP FOR HYDROSTATIC VALVE CONNECTION. THE MAXIMUM SIDE PORT SIZE IS 12-IN, AND PORT SIZES > 12-IN ARE PERMITTED TO BE LOCATED ON THE BOTTOM. ANY CONFIGURATION OF MULTIPLE PORTS OF ANY SIZE IS PERMITTED PROVIDED ALL SIDE PORTS ARE <= 12-IN. THE CERTIFIED MAXIMUM FLOW RATE FOR THE SOFA MUST NOT BE EXCEEDED. "DALDORADO" IS STENCILED ON THE BODY, AND MARKING REQUIRED BY STANDARDS IS IMPRINTED ON THE LEDGE. OPTIONAL WATER STOPS ON PORTS, MOUNTING UNISTRUTS, AND PORT GUSSETS ARE AVAILABLE. PORTS MAY BE SCH-40 OR SCH-80, TYPE SLIP COUPLING, THREADED FEMALE ADAPTER, OR FLANGE COUPLING.

GRATE: THREE (3) FLAT 18-IN x 18-IN GRATES FORMED OF UV-STABILIZED MOLDED PVC, CERTIFIED TO APSP/ANSI/ICC-16 2017, NSF/ANSI/CAN 50-2020, AND USPC. THE TOP SURFACE OF THE GRATE HAS A TEXTURED DESIGN FOR SLIP RESISTANCE. GRATE SECTIONS ARE 0.20-INCHES (5mm) WIDE AND 1-IN (25.4MM) AVG. DEPTH FOR LOAD STRENGTH REQUIREMENTS. SPACE BETWEEN GRATE BARS DOES NOT EXCEED 0.39-IN (10MM). GRATE PROVIDES A MINIMUM 62% OPEN AREA FOR UNRESTRICTED WATER FLOW. THE MANUFACTURE DATE AND MARKING REQUIRED BY STANDARDS IS MOLDED INTO EACH GRATE

INSTALLATION: FOLLOW DALDORADO SUPPLIED INSTALLATION INSTRUCTIONS AND WARNINGS. GRATE MUST BE INSTALLED WITHIN SUMP USING ONLY THE 316 SS $\frac{1}{4}$"-20x1.25" MACHINE SCREWS (TESTED TO APSP/ANSI/ICC-16 2017) AS SUPPLIED BY DALDORADO. NO OTHERS ARE PERMITTED.

| DalMAX-SG-185429 OPTIONS | | |
|---|---|---|
| TOTAL GPM | 2944 FLOOR, 2872 WALL | |
| PORT CONFIGURATIONS | ANY PER NOTES ABOVE | |
| PIPE SCHEDULE-PVC | 40 | 80 |
| MAX PORT SIZE, SIDE | 12-IN | |
| MAX PORT SIZE, BOTTOM | 24-IN | |
| GRATE COLOR | WHITE | |
| ANY P.O. SUBMITTAL MUST BE ATTACHED TO ORDER FORM | | |

**SUMP LIFE: LIFE OF THE AQUATIC FACILITY**
**GRATES AND FASTENERS: 25 YEAR SERVICE LIFE/10 YEAR WARRANTY**

All drawing are saved in a *.dwg format and are provided as a service to our customers; dimensions supplied by Daldorado are for reference only. Daldorado or any authorized distributor of our products will not be held responsible from files which have been converted and does not warranty the documents against deficiencies or typographical errors of any kind. All measurements of the actual product must be verified before any custom fabrication in the field occurs. COPYRIGHT: This document is the property of Daldorado, LLC and is provided on an in-confidence basis, it may not be copied or reproduced without the permission of Daldorado or its authorized agent.

| | | | |
|---|---|---|---|
| Product: | 18x54x29 Sump & Grate Package | | |
| Product #: | DalMAX-SG-185429 | | |
| Material: | FG/PVC | Rev Date: | 7/20/2022 |
| Color: | WHITE | Rev By: | Daldorado |

DALDORADO
4327 Arnold Ave, Naples, FL 34104
Phone: 888.509.8128
www.daldorado.com